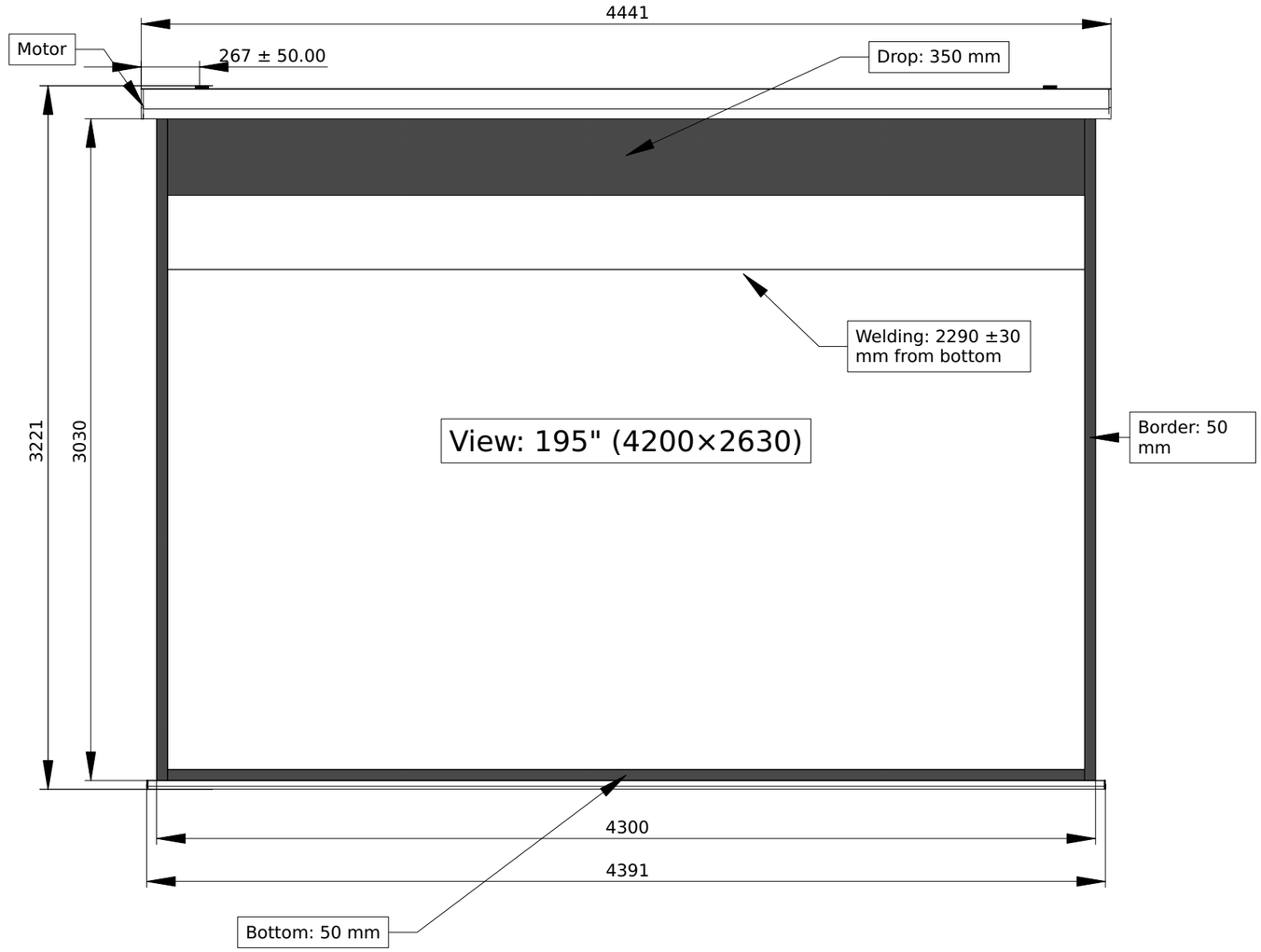

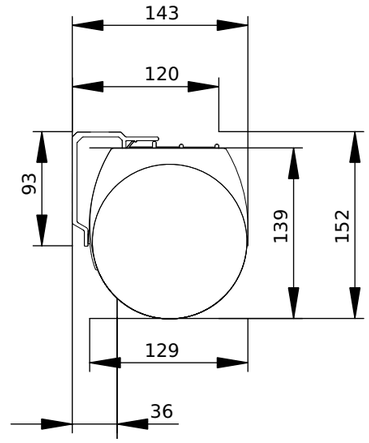

Case Side Detail

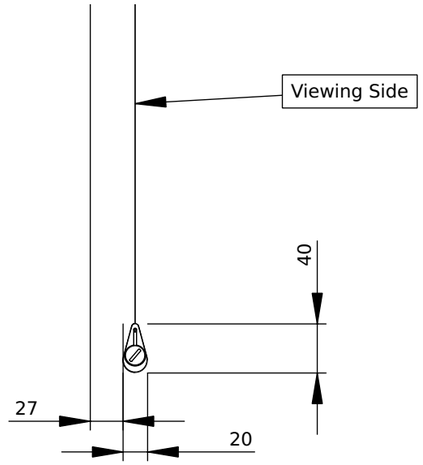

Weight Side Detail

UNDIMENSIONED FILLETS R = 0.5		UNDIMENSIONED CHAMFERS 1 X 45°						NON-CUMULATIVE CENTER TOLERANCE FOR THREADED OR SMOOTH BORES + 0.5						
DIMENSIONS WITHOUT TOLERANCES		LINEAR DIMENSIONS												
		UP TO 6	UP TO 30	UP TO 120	UP TO 400	UP TO 1000	UP TO 2000	UP TO 4000	OVER 4000	MACHINED	= 0.1/100	⊥ 0.1/100	▱ 0.05/100	◎ 0.05/100
UNI-ISO 2768-1	MACHINE TOOLS	±0.1	±0.2	±0.3	±0.5	±0.8	±1.2	±2	±3	RAW	= 2.5/1000	⊥ 2.5/1000	▱ 1.5/1000	◎ 1.5/1000
UNI-ISO 2768-1	CARPENTRY	±0.5	±0.8	±1.2	±1.5	±2	±3	±4	±5					

SCREENLINE

38060 Besenello (TN), Italy
Via Nazionale, 1/n - 1/u
+39 0464 830003
info@screenline.it
screenline.it

Description:
Jago WH 420x263 White Ice DROP35BB BE5BB BOT5BB WH Rear L S

TD

Scale:	Format:
–	A3

Designer:	Weight:	Rev:
W.S.	34 kg	–

Product Code:	File Name:	Material:	Sheet:
150-000766	–	–	1/1

This drawing is property of “Screenline S.r.l.” and cannot be reproduced or released to third parties without approval from its owner, according to the terms of law.