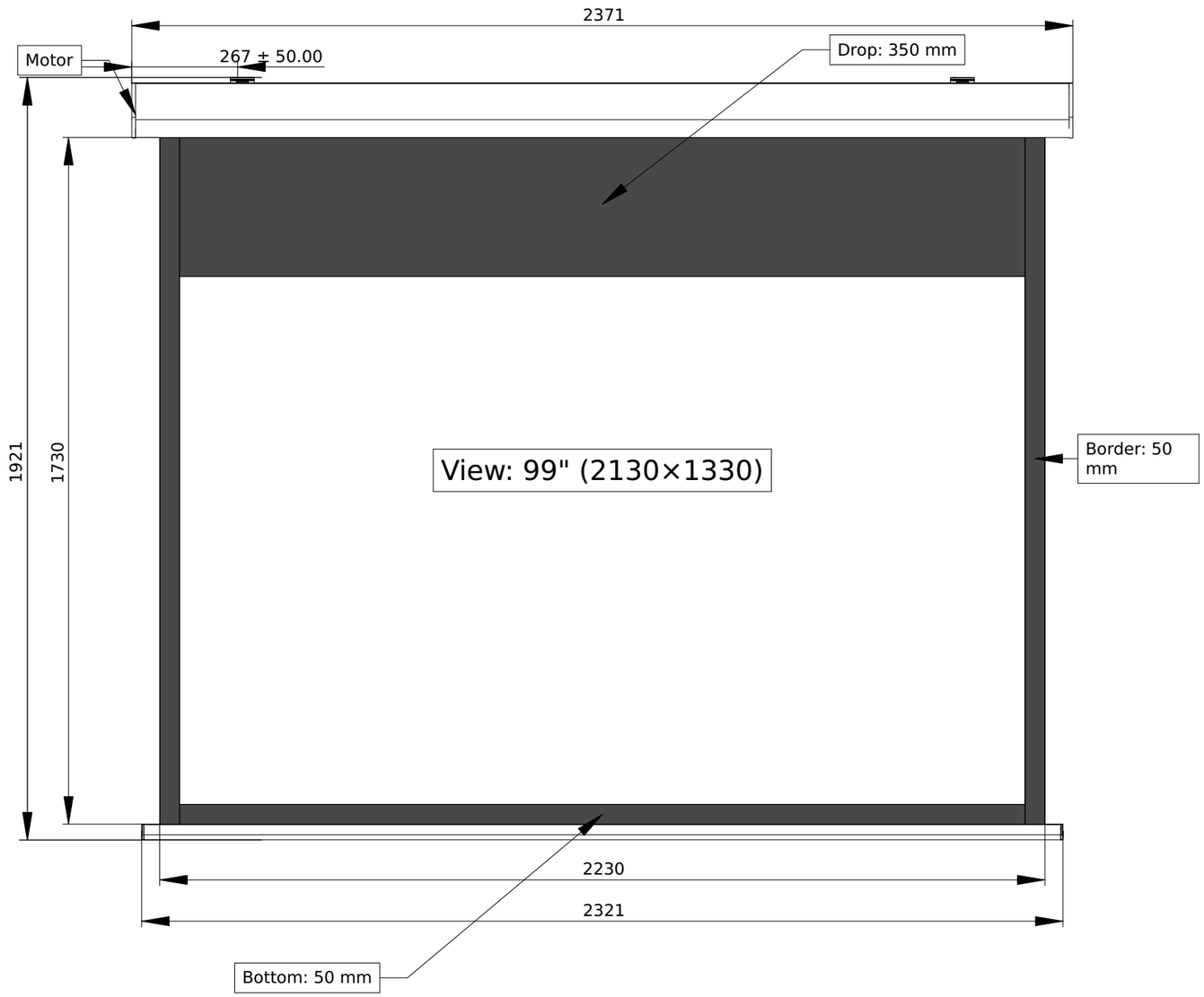


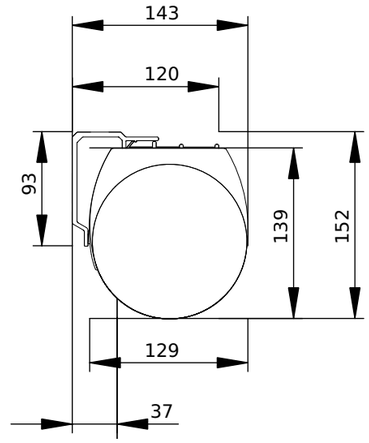


Case Side Detail

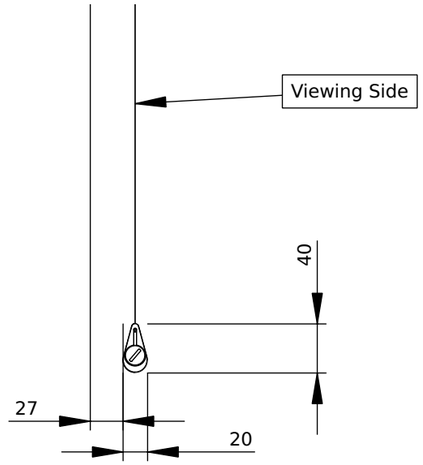


Weight Side Detail

| UNDIMENSIONED FILLETS R = 0.5 | | UNDIMENSIONED CHAMFERS 1 X 45° | | | | | | NON-CUMULATIVE CENTER TOLERANCE FOR THREADED OR SMOOTH BORES + 0.5 | | | | | | |
|---|---|---|---|---|---|---|---|---|---|---|---|---|---|---|
| DIMENSIONS WITHOUT TOLERANCES | | LINEAR DIMENSIONS | | | | | | | | | | | | |
| | | UP TO 6 | UP TO 30 | UP TO 120 | UP TO 400 | UP TO 1000 | UP TO 2000 | UP TO 4000 | OVER 4000 | MACHINED | = 0.1/100 | ⊥ 0.1/100 | ▱ 0.05/100 | ◎ 0.05/100 |
| UNI-ISO 2768-1 | MACHINE TOOLS | ±0.1 | ±0.2 | ±0.3 | ±0.5 | ±0.8 | ±1.2 | ±2 | ±3 | RAW | = 2.5/1000 | ⊥ 2.5/1000 | ▱ 1.5/1000 | ◎ 1.5/1000 |
| UNI-ISO 2768-1 | CARPENTRY | ±0.5 | ±0.8 | ±1.2 | ±1.5 | ±2 | ±3 | ±4 | ±5 | | | | | |

SCREENLINE

38060 Besenello (TN), Italy
Via Nazionale, 1/n - 1/u
+39 0464 830003
info@screenline.it
screenline.it

Description:
Jago WH 213x133 White Ice DROP35BB BE 5 BB BOT 5 BB WH Rear
L STD

Scale: –

Format: A3

Designer: W.S.

Weight: ––

Rev: –

Product Code: 150-011671

File Name: –

Material: –

Sheet: 1/1

This drawing is property of “Screenline S.r.l.” and cannot be reproduced or released to third parties without approval from its owner, according to the terms of law.